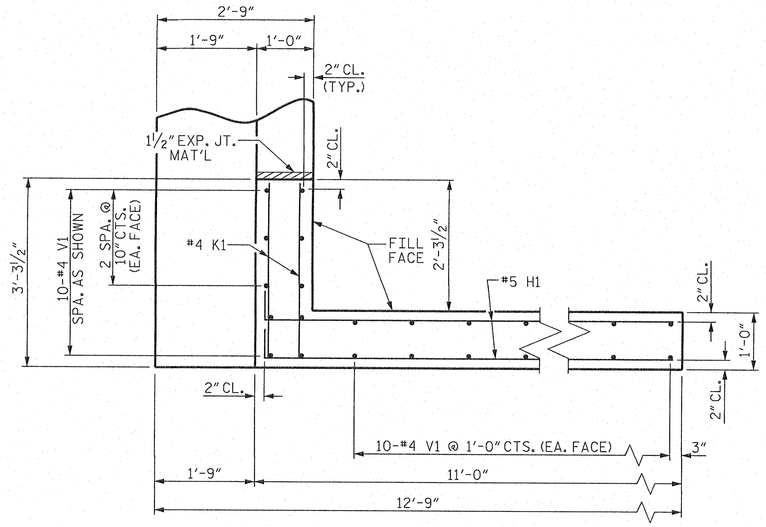

PLAN OF WING (W1)

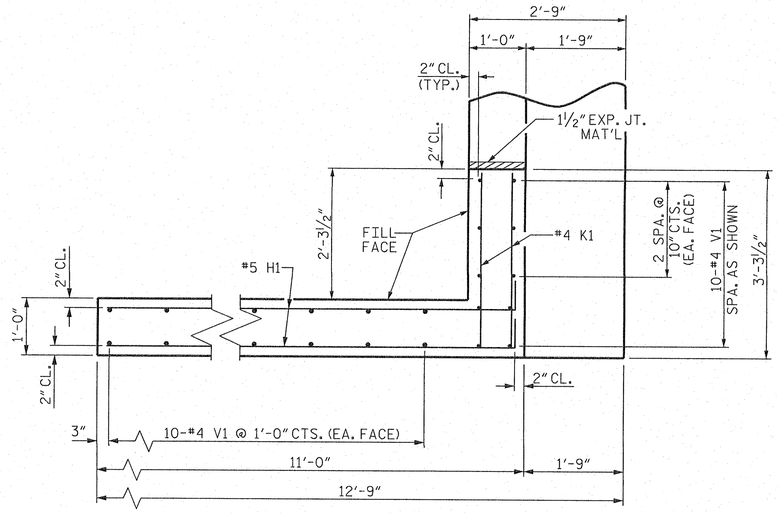

PLAN OF WING (W2)

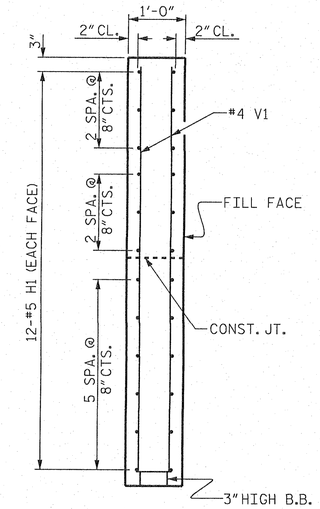

SECTION X-X

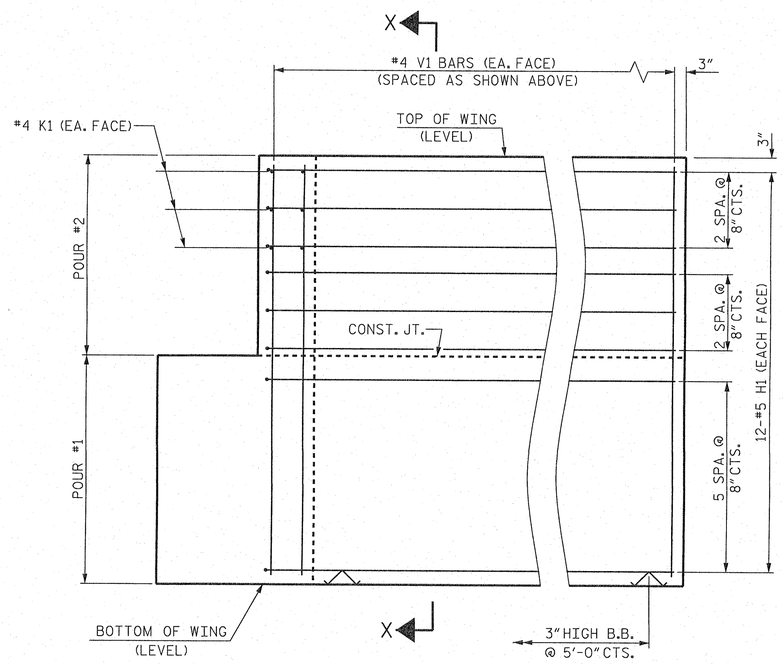

ELEVATION OF WING (W1)

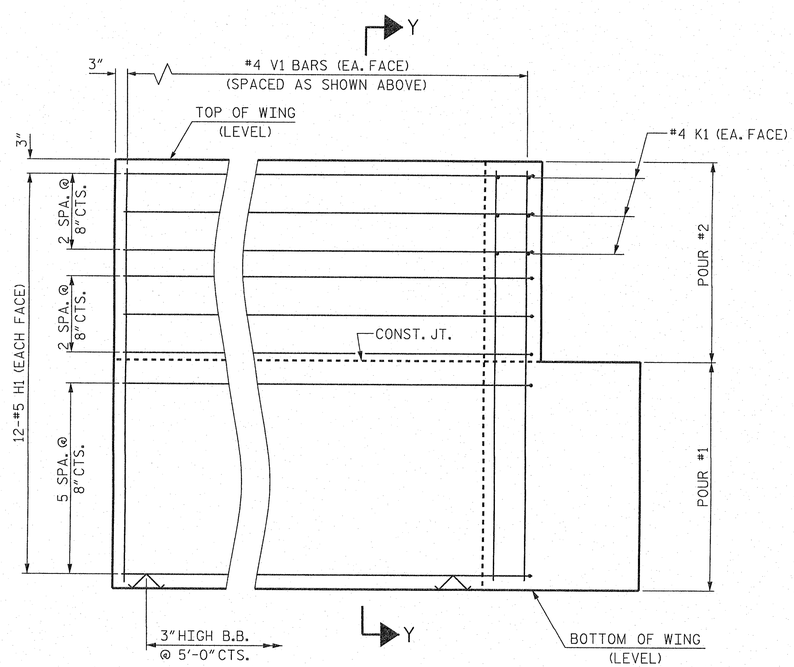

ELEVATION OF WING (W2)

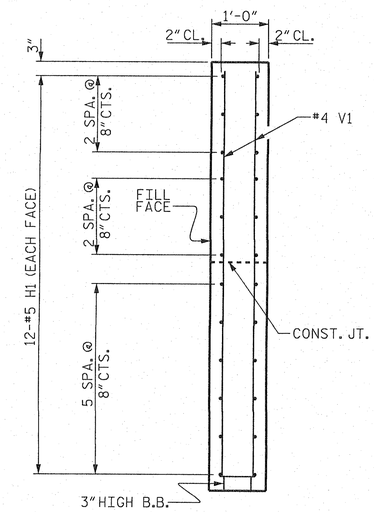

SECTION Y-Y

WING DETAILS

PROJECT NO. 17BP.8.R.77

RANDOLPH COUNTY

STATION: 13+00.00 -L-

SHEET 3 OF 4

STATE OF NORTH CAROLINA
DEPARTMENT OF TRANSPORTATION
RALEIGH

SUBSTRUCTURE

END BENT
WING DETAILS

NORTH CAROLINA PROFESSIONAL SEAL 24939 ENGINEER BYRON E. ATKINSON
12/22/14

ASSEMBLED BY: B.E. LANNING	DATE: 10/14
CHECKED BY : B.E. ATKINSON	DATE: 10/14
DESIGN ENGINEER OF RECORD: B.E. ATKINSON	DATE: 10/14
DRAWN BY : WJH 12/11	REV. 8/14 MAA/TMG
CHECKED BY : AAC 12/11	

MI ENGINEERING
1011 SCHAUB DRIVE, SUITE 100
RALEIGH, NC 27606
(919) 851-6606
FIRM PE NUMBER : P-0671

REVISIONS							
NO.	BY:	DATE:	NO.	BY:	DATE:	SHEET NO.	
1			3			S-12	
2			4			TOTAL SHEETS	
						15	

STD. NO. EB_30_90S4_33BB

12/2/2014
12:10:02 PM
User: blanning
Filename: P:\NC Bridges\MI3012 - Div 08 Bridge Replacements_Summit\MI3012.03_Randolph 232\17BP8R77\Structures\17BP8R77_SD_EB3.dgn