DocuSign Envelope ID: 6C28DFD1-AEB9-4F32-97AA-3411A8BFC24A

PROJECT REFERENCE NO.	SHEET NO.
17BP.8.R.77	2A-2
ROADWAY DESIGN ENGINEER	PAVEMENT DESIGN ENGINEER

9/18/2015

NORTH CAROLINA PROFESSIONAL SEAL 034371 ENGINEER BRANDON W. JOHNSON

DocuSigned by: Brandon W. Johnson

Prepared in the Office of: SUMMIT DESIGN AND ENGINEERING SERVICES

NC FIRM LICENSE No: P-0339
504 Meadowlands Drive
Hillsborough, NC 27278
(919) 732-3883 - (919) 732-6676 (FAX)

PAVEMENT SCHEDULE	
C1	2″ SF9.5A
C2	VAR. SF9.5A
D1	3″ I19.0B
D2	VAR. I19.0B
E1	5.5″ B25.0B
E2	VAR. B25.0B
T	EARTH MATERIAL
U	EX. PAVEMENT
W	WEDGING

NOTE: PAVEMENT EDGE SLOPES ARE 1:1 UNLESS SHOWN OTHERWISE.

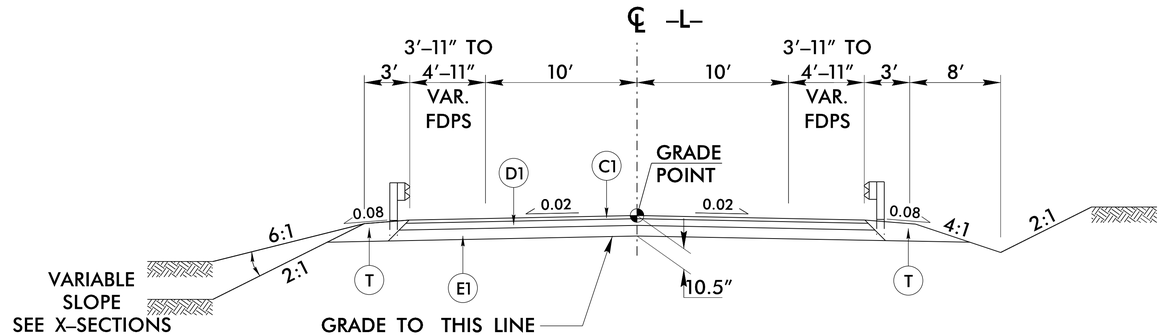

TYPICAL SECTION NO. 3

–L– (LASSITER MILL RD)

USE TYPICAL SECTION NO. 3

–L– STA 12+10.00 TO STA 12+58.88 (BEGIN BRIDGE)
–L– STA 13+41.13 (END BRIDGE) TO STA 13+90.00

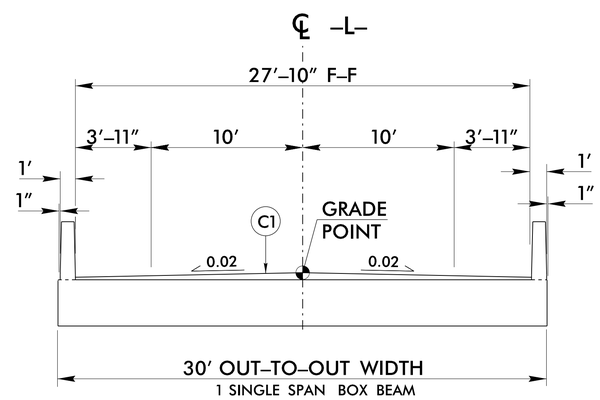

BRIDGE TYPICAL SECTION

FOR BRIDGE OVER HIGH PINE CREEK

USE BRIDGE TYPICAL SECTION

–L– STA 12+58.88 (BEGIN BRIDGE) TO STA 13+41.13 (END BRIDGE)

6/2/99
12-AUG-2015 15:07
s:\structures\17bp8r77_sht2a.dgn
spencer.martin