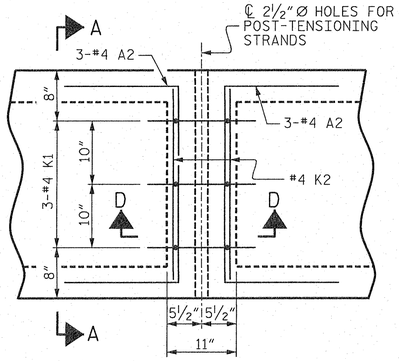

PLAN

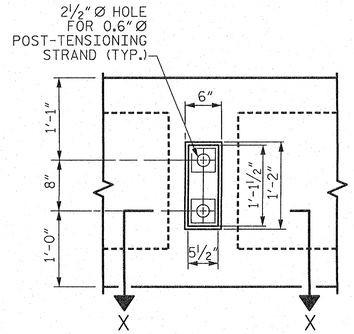

VIEW Y-Y

SHOWING ELEVATION VIEW OF GROUTED RECESS

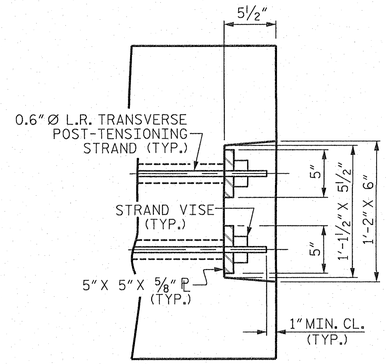

DETAIL "C"

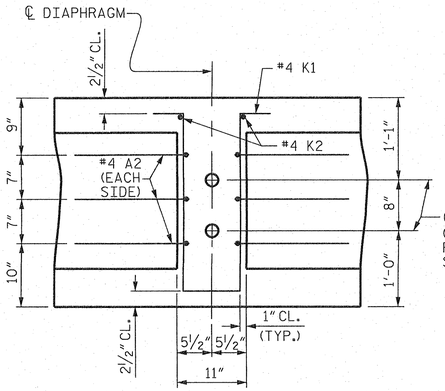

SECTION D-D

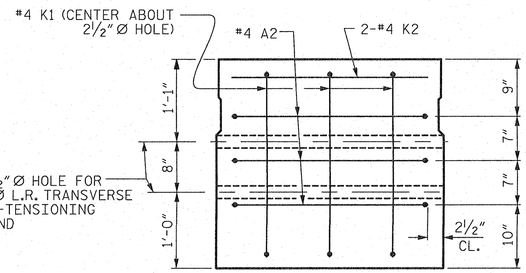

SECTION A-A

VOIDS NOT SHOWN

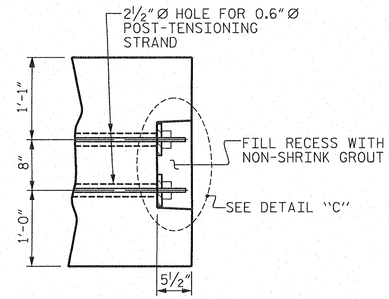

PART SECTION AT RECESS

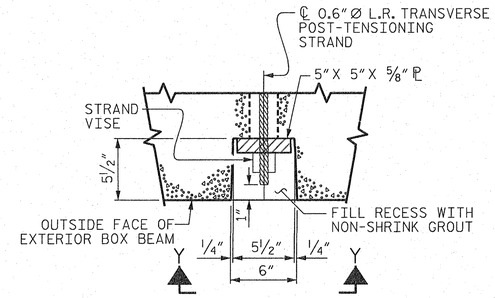

SECTION X-X

SHOWING PLAN VIEW OF GROUTED RECESS

GROUTED RECESS DETAIL AT END OF POST-TENSIONED STRANDS OF EXTERIOR BOX BEAM

DOUBLE DIAPHRAGM DETAILS

#4 "S" BARS NOT SHOWN. #4 "S" BARS MAY BE SHIFTED SLIGHTLY TO CLEAR 2½" Ø HOLE.

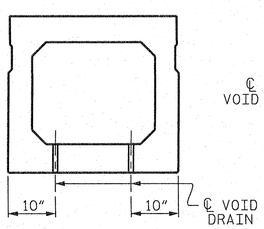

SECTION B-B

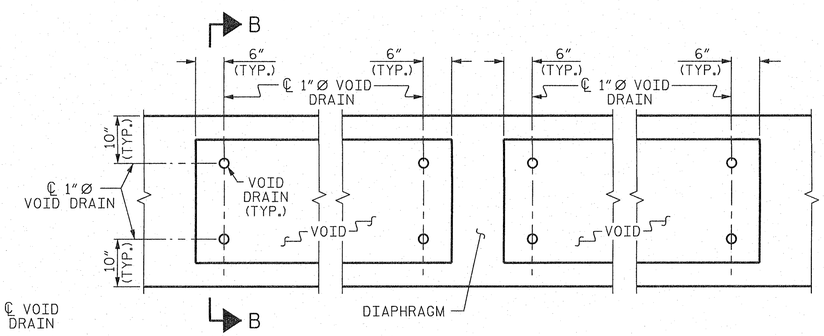

PART PLAN

VOID DRAIN DETAILS

(DIMENSIONS SHOWN ARE TYPICAL FOR EACH VOID)

DEAD LOAD DEFLECTION AND CAMBER	
	3'-0" x 2'-9"
80' BOX BEAM UNIT	0.6"Ø L.R. STRAND
CAMBER (SLAB ALONE IN PLACE)	1¾" ↑
DEFLECTION DUE TO SUPERIMPOSED DEAD LOAD**	½" ↓
FINAL CAMBER	1¼" ↑

** INCLUDES FUTURE WEARING SURFACE

PROJECT NO. 17BP.8.R.77

RANDOLPH COUNTY

STATION: 13+00.00 -L-

SHEET 4 OF 5

NORTH CAROLINA PROFESSIONAL SEAL 24939 ENGINEER BIRON E. ATKINSON 12/2/14

STATE OF NORTH CAROLINA
DEPARTMENT OF TRANSPORTATION
RALEIGH

STANDARD
3'-0" X 2'-9"
PRESTRESSED CONCRETE
BOX BEAM UNIT

ASSEMBLED BY:	B.E. LANNING	DATE: 10/14
CHECKED BY :	B.E. ATKINSON	DATE: 10/14
DESIGN ENGINEER OF RECORD:	B.E. ATKINSON	DATE: 10/14
DRAWN BY : DGE 10/11	REV. 8/14	MAA/TMG
CHECKED BY : TMG 11/11		

MI ENGINEERING
1011 SCHAUB DRIVE, SUITE 100
RALEIGH, NC 27606
(919) 851-6606
FIRM PE NUMBER : P-0671

REVISIONS								
NO.	BY:	DATE:	NO.	BY:	DATE:		SHEET NO.	
1			3				S-7	
2			4				TOTAL SHEETS	
							15	

STD.NO.33PCBB5_90S

12/2/2014
12:09:51 PM
User: blanning
Filename: P:\NC Bridges\M13012 - Div 08 Bridge Replacements_Summit\M13012.03_Randolph 232\17BP8R77\Structures\17BP8R77_SD_BBU4.dgn