DocuSign Envelope ID: 6C28DFD1-AEB9-4F32-97AA-3411A8BFC24A

6/2/99

PROJECT REFERENCE NO.	SHEET NO.
17BP.8.R.77	2A-1
ROADWAY DESIGN ENGINEER	PAVEMENT DESIGN ENGINEER

9/18/2015

NORTH CAROLINA PROFESSIONAL SEAL 034371 ENGINEER BRANDON W. JOHNSON

DocuSigned by: Brandon W. Johnson

Prepared in the Office of: SUMMIT DESIGN AND ENGINEERING SERVICES

NC FIRM LICENSE No: P-0339
504 Meadowlands Drive
Hillsborough, NC 27278
(919) 732-3883 - (919) 732-6676 (FAX)

PAVEMENT SCHEDULE

C1	PROP. APPROX. 2″ ASPHALT CONCRETE SURFACE COURSE, TYPE SF9.5A, AT AN AVERAGE RATE OF 110 LBS. PER SQ. YD. IN EACH OF TWO LAYERS.
C2	PROP. VARIABLE DEPTH ASPHALT CONCRETE SURFACE COURSE, TYPE SF9.5A, AT AN AVERAGE RATE OF 110 LBS. PER SQ. YD. PER 1″ DEPTH. TO BE PLACED IN LAYERS NOT TO EXCEED 1.5″ IN DEPTH.
D1	PROP. APPROX. 3″ ASPHALT CONCRETE INTERMEDIATE COURSE, TYPE I19.0B, AT AN AVERAGE RATE OF 342 LBS. PER SQ. YD.
D2	PROP. VAR. DEPTH ASPHALT CONCRETE INTERMEDIATE COURSE, TYPE I19.0B, AT AN AVERAGE RATE OF 114 LBS. PER SQ. YD. PER 1″ DEPTH. TO BE PLACED IN LAYERS NOT LESS THAN 2.5″ IN DEPTH OR GREATER THAN 4″ IN DEPTH.
E1	PROP. APPROX. 5.5″ ASPHALT CONCRETE BASE COURSE, TYPE B25.0B, AT AN AVERAGE RATE OF 627 LBS. PER SQ. YD.
E2	PROP. VARIABLE DEPTH ASPHALT CONCRETE BASE COURSE, TYPE B25.0B, AT AN AVERAGE RATE OF 114 LBS. PER SQ. YD. PER 1″ DEPTH. TO BE PLACED. IN LAYERS NOT LESS THAN 3″ IN DEPTH OR GREATER THAN 5.5″ IN DEPTH
T	EARTH MATERIAL
V	MILLING BITUMINOUS PAVEMENT.
U	EXISTING PAVEMENT
W	VARIABLE DEPTH ASPHALT PAVEMENT (SEE STANDARD WEDGING DETAIL ON THIS SHEET)

NOTE: PAVEMENT EDGE SLOPES ARE 1:1 UNLESS SHOWN OTHERWISE.

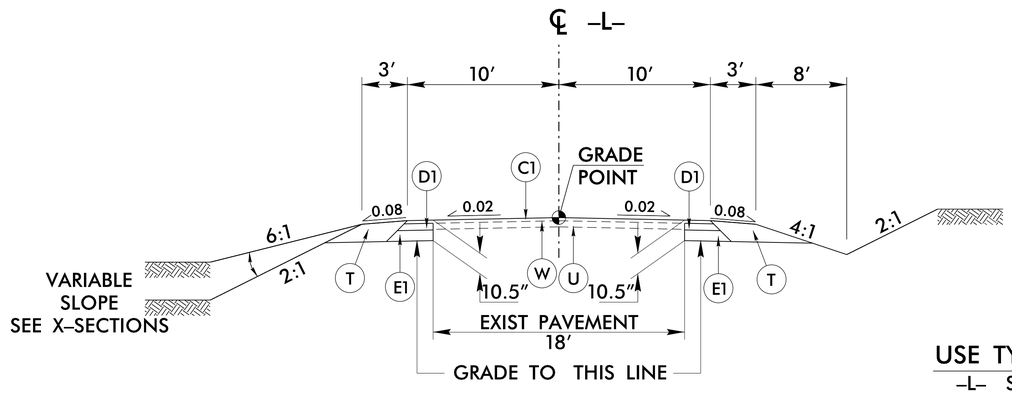

TYPICAL SECTION NO. 1

–L– (LASSITER MILL RD)

USE TYPICAL SECTION NO. 1

–L– STA 11+00.00 TO STA 11+85.00
–L– STA 14+15.00 TO STA 15+00.00

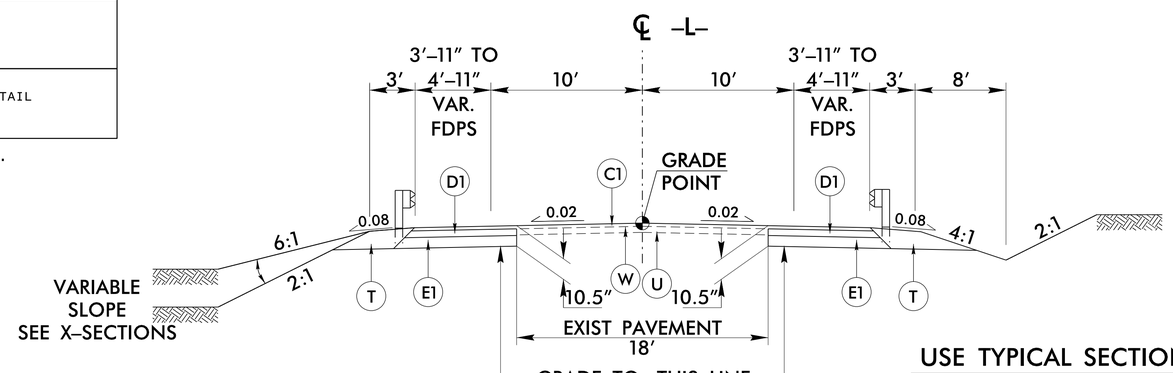

TYPICAL SECTION NO. 2

–L– (LASSITER MILL RD)

USE TYPICAL SECTION NO. 2

–L– STA 11+85.00 TO STA 12+10.00
–L– STA 13+90.00 TO STA 14+15.00

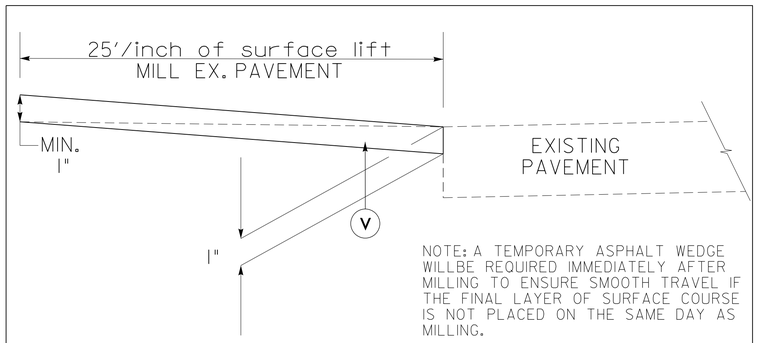

INCIDENTAL MILLING PAVEMENT KEY–IN DETAIL (TIE–IN)

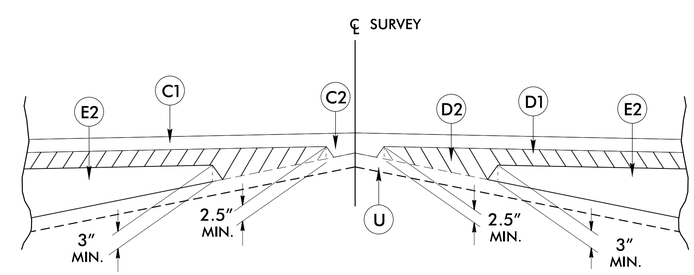

Detail Showing Method of Wedging

12:41PM 2015-05-07
J:\2015\15-007
SUMMIT
sheet1