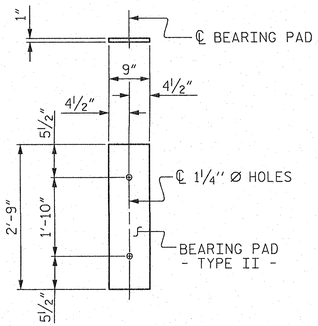

FIXED END

(TYPE II - 20 REQ'D.)

ELASTOMERIC BEARING DETAILS

ELASTOMER IN ALL BEARINGS SHALL BE 60 DUROMETER HARDNESS.

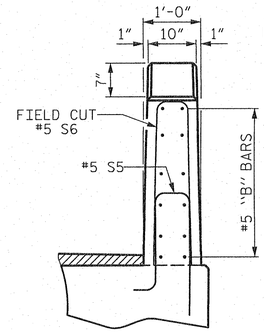

END VIEW

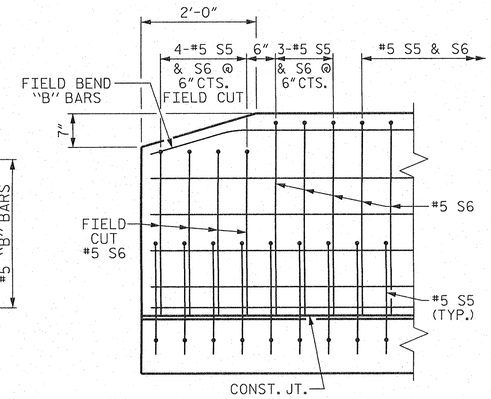

SIDE VIEW

END OF RAIL DETAILS

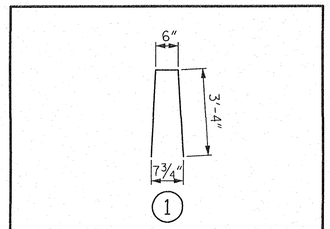

BAR TYPE

BAR DIMENSIONS ARE OUT TO OUT

BOX BEAM UNITS REQUIRED

	NUMBER	LENGTH	TOTAL LENGTH
EXTERIOR B.B.	2	80'-0"	160'-0"
INTERIOR B.B.	8	80'-0"	640'-0"
TOTAL	10	———	800'-0"

BILL OF MATERIAL FOR VERTICAL CONCRETE BARRIER RAIL

BAR	BARS PER PAIR OF EXTERIOR UNITS	SIZE	TYPE	LENGTH	WEIGHT
	80' UNIT				
✳ B8	72	#5	STR	26'-3"	1971
✳ S6	222	#5	1	7'-2"	1659
✳ EPOXY COATED REINFORCING STEEL			LBS.		3630
CLASS AA CONCRETE			CU.YDS.		20.7
TOTAL VERTICAL CONCRETE BARRIER RAIL			LN. FT.		160.0

GUTTERLINE ASPHALT THICKNESS & RAIL HEIGHT

	ASPHALT OVERLAY THICKNESS @ MID-SPAN	RAIL HEIGHT @ MID-SPAN
80' UNITS	2¼"	3'-8¼"

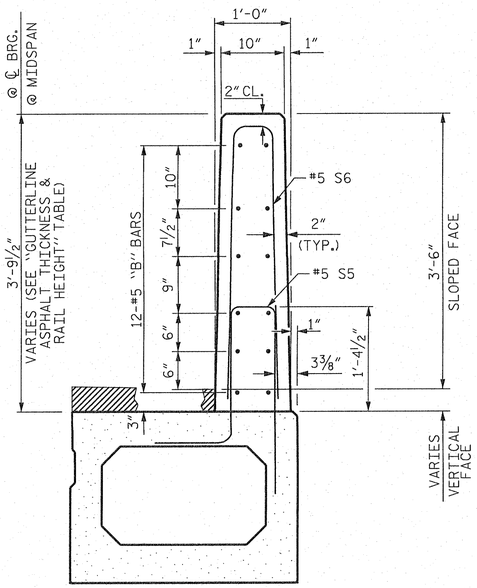

SECTION THRU RAIL

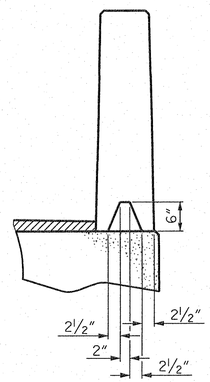

SECTION S-S

AT DAM IN OPEN JOINT
(THIS IS TO BE USED ONLY
WHEN SLIP FORM IS USED)

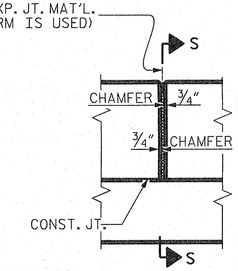

ELEVATION AT EXPANSION JOINTS

VERTICAL CONCRETE BARRIER RAIL DETAILS

PROJECT NO. 17BP.8.R.77

RANDOLPH COUNTY

STATION: 13+00.00 -L-

SHEET 5 OF 5

STATE OF NORTH CAROLINA
DEPARTMENT OF TRANSPORTATION
RALEIGH

3'-0" X 2'-9" PRESTRESSED CONCRETE BOX BEAM UNIT

NORTH CAROLINA PROFESSIONAL SEAL 24939 ENGINEER BYRON E. ATKINSON 12/02/14

MI ENGINEERING
1011 SCHAUB DRIVE, SUITE 100
RALEIGH, NC 27606
(919) 851-6606
FIRM PE NUMBER : P-0671

REVISIONS							SHEET NO.
NO.	BY:	DATE:	NO.	BY:	DATE:		S-8
1			3				TOTAL SHEETS
2			4				15

STD. NO. 33PCBB8_90S

ASSEMBLED BY: B.E. LANNING	DATE: 10/14	
CHECKED BY : B.E. ATKINSON	DATE: 10/14	
DESIGN ENGINEER OF RECORD: B.E. ATKINSON	DATE: 10/14	
DRAWN BY : DGE 10/11	REV. 8/14	MAA/TMG
CHECKED BY : TMG 11/11		

12/2/2014
12:09:53 PM
User: blanning
Filename: P:\NC Bridges\MI3012 - Div 08 Bridge Replacements_Summit\MI3012.03_Randolph 232\17BP8R77\Structures\17BP8R77_SD_BBU5.dgn